1. IoT Project Name: **IoT-based Wemos D1 R2 Radar**.

2. Preparation:

Hardware	Qty
Wemos D1 R2 + USB cable type A/B	1
Ultrasonic Sensor (HC-SR04)	1
Servo Motor 180°	1
Jumper cables	7

Software
Arduino IDE
Processing

IoT Platform
MQTT Explorer

3. Hardware Setup:

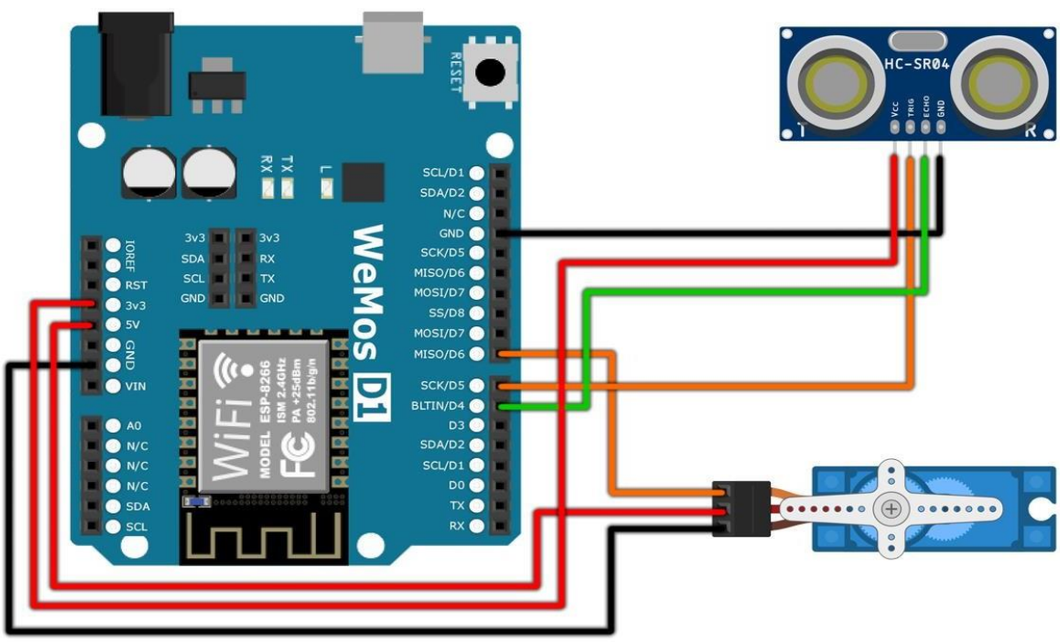

Device Name	Device Foot Pins		Connection Cable Color	Connected to the device
	Initial	Destination		
Wemos D1 R2	5V	VCC	Red	Servo
	D6	PWM Control	Orange	
	GND	GND	Black	
	3.3V	VCC	Red	HC-SR04 (Ultrasonic Sensor)
	D5	Trig	Orange	
	D4	Echo	Green	
	GND	GND	Black	

4. Arduino IDE Setup:

- Open the **Arduino IDE**.
- Click: **File** ⟶ **Preferences**.
- Fill in the **Additional Board Manager URLs** :

```
http://arduino.esp8266.com/stable/package_esp8266com_index.json
```

- Click: **Tools** → **Board** → **Board Manager** → Install: **esp8266**. You can see an example below.

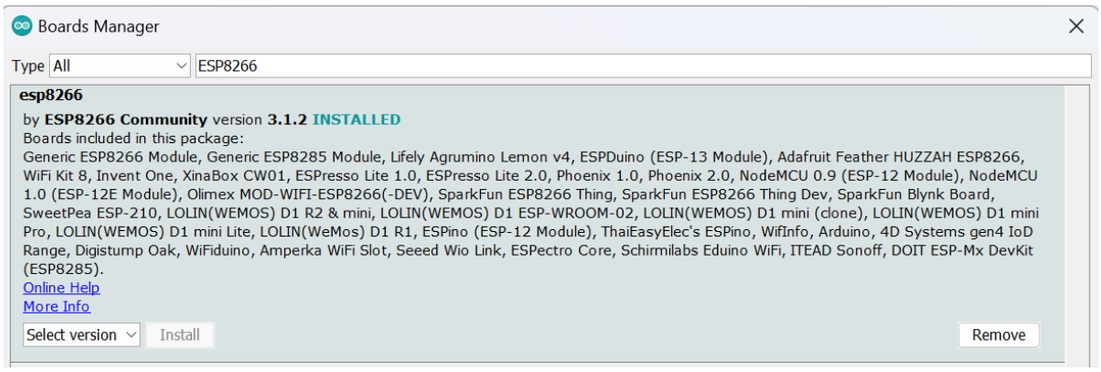

- Selecting a Board by clicking: **Tools** → **Board** → **Board Manager** → **ESP8266 Board** → **LOLIN(WEMOS) D1 R2 & mini**.

- Change the speed by clicking: **Tools** → **Upload Speed** → **115200**.

- Download all the library zip files. Then paste it in the: **C:\Users\Computer_Username\Documents\Arduino\libraries**.

- Customize your **port** with the one in the **device manager**. This is so that the board can be recognized by the **Arduino IDE**, so that coding can be done.

- Open the **Wemos D1 R2 Radar** project by clicking: **File** → **Open** → **wemos_d1r2_radar.ino**.
- Change the **WiFi name** and **password** according to what you are currently using.
- Before uploading the program please click: **Verify**.
- If there is no error in the program code, then please click: **Upload**.

5. Processing Setup:

   - Open the **Processing**.

   - Open the **Draw Radar** project by clicking: **File** → **Open** → **drawradar.pde**.

   - Customize your **port** with the one in the **Arduino IDE**. This is so that the board can be recognized by **Processing**, so that the code can be run properly.

   - The last step, please click: **Run**.

6. MQTT Explorer Setup:

   - Open the **MQTT Explorer**.

   - Click the Connections: **test.mosquitto.org**.

   - Click **ADVANCED** → **Delete All Topics**.

   - Create a new Topic with QoS "0": **coursera/uci/radar**.

   - Next click: **BACK**.

   - The last step, please click: **CONNECT**.